产品及应用/products applications

- 三相干式变压器广泛适用于交流50或60Hz，电压至660V户内式的电器电源设备之用。产品的输入、输出电压，联接组别，调节抽头位置，绕组容量分配，次级绕组配备，是否要求带外壳等，均可根据用户的要求进行精心的设计与制造

- Three-phase dry-type transformers are widely used in indoor electrical power equipment for AC 50 or 60Hz, with voltages up to 660V. The product's input and output voltage, connection group, tap position, winding capacity allocation, secondary winding configuration, and whether to include a cabinet, can all be customized according to user requirements for precise design and manufacturing.

技术参数/Specification

1 额定容量：1KVA~800KVA
2 联结组别：Dyn1 Yyn0
3 输入额定电压：三相380V或单相220V
4 温升限值：铁芯不超过85K，线圈温升不超过95K
5 电压等级：1KV
6 工频耐压：3KV/min

1 Rated capacity: 1KVA~800KVA
2 Connection groups: Dyn1 Yyn0
3 Input rated voltage: Three-phase 380V or Single-phase 220V
4 Temperature rise limit: core not exceeding 85K, coil temperature rise not exceeding 95K
5 Voltage level: 1KV
6 Power frequency withstand voltage: 3KV/min

变压器型号	空载损耗 W	负载损耗 W	重量 kg	外形尺寸					安装孔
				L	W	H	A	B	
SG-1KVA	35	75	20	210	170	210	100	90	7×12
SG-2KVA	50	95	30	240	190	230	125	120	9×15
SG-3KVA	55	125	40	300	180	280	150	120	9×15
SG-4KVA	75	150	46	300	200	280	150	120	11×18
SG-5KVA	75	175	50	300	200	280	150	120	11×18
SG-6KVA	95	190	57	300	220	280	150	140	11×18
SG-7KVA	120	200	68	300	240	280	150	160	11×18
SG-8KVA	140	230	75	360	230	330	200	140	11×18
SG-9KVA	140	240	83	360	230	330	200	140	11×18
SG-10KVA	160	250	90	360	230	330	200	155	11×18
SG-12KVA	190	400	110	420	230	380	250	140	11×18
SG-15KVA	190	400	120	420	230	380	250	140	11×18
SG-20KVA	220	460	150	480	250	380	300	160	14
SG-25KVA	280	600	180	550	350	460	300	300	14
SG-30KVA	350	760	210	570	360	620	350	300	14
SG-40KVA	400	850	260	610	370	680	350	300	14
SG-50KVA	450	1060	290	645	370	710	350	300	14
SG-60KVA	520	1260	340	700	370	710	400	300	14
SG-80KVA	650	1460	400	735	380	760	400	300	14
SG-100KVA	800	1670	530	780	400	860	500	350	14
SG-150KVA	600	2250	590	930	450	820	550	400	14
SG-200KVA	700	2680	760	960	450	970	550	400	14
SG-250KVA	810	2920	920	1050	450	980	660	400	14
SG-315KVA	990	3670	1080	1080	550	1060	660	500	14
SG-400KVA	1100	4220	1270	1130	550	1170	660	550	14
SG-500KVA	1310	5170	1650	1275	650	1255	660	600	14
SG-630KVA	1510	6220	1850	1330	650	1255	660	600	14
SG-800KVA	1710	7360	2210	1440	650	1285	820	600	14
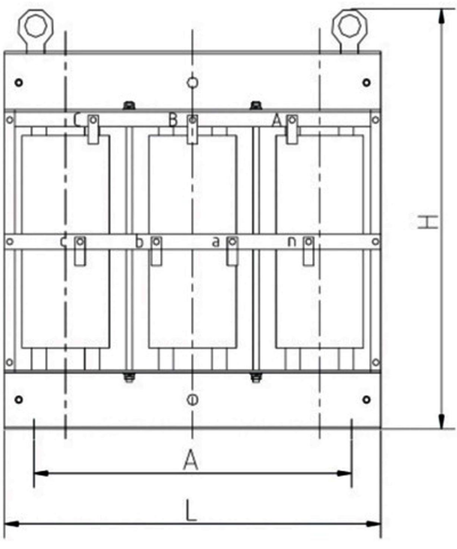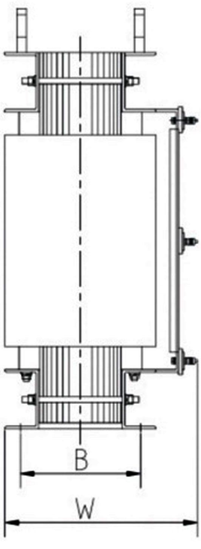
备注：以上为我司标准规格，特殊规格可根据客户要求定制.